Simple Software for Prototype Hardware: Using LabView to Enable Algorithm Development for a Prototype GLXP Lunar Hopping Vehicle

Flight Software Workshop 2010

December 9, 2010

Christopher Han

Phillip Cunio

Massachusetts Institute of Technology

Overview

- GLXP and TALARIS Background
- Current and Past Work
- Prototype Software Development
- Modularity
- Software and Avionics Architecture
- GNC Execution
- Summary

Motivation and Background

- Google Lunar X-Prize (GLXP)
  - $30 million competition
  - Go to the Moon, traverse 500 m, send back images and video
  - Next Giant Leaps team

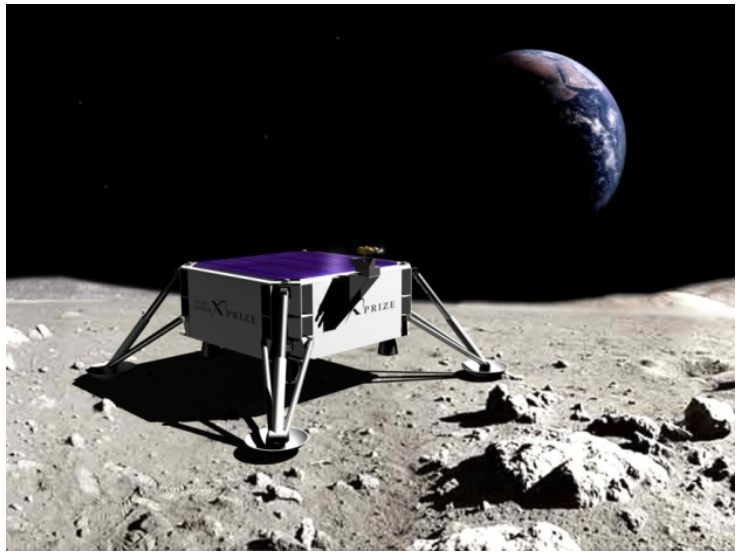

- **T**errestrial **A**rtificial **L**unar **A**nd **R**educed grav**I**ty **S**imulator (TALARIS)
  - Collaboration between MIT/Draper Laboratory for the GLXP vehicle
  - Terrestrial 1g testbed for developing guidance, navigation, and control algorithms for remote exploration of lunar and planetary surfaces

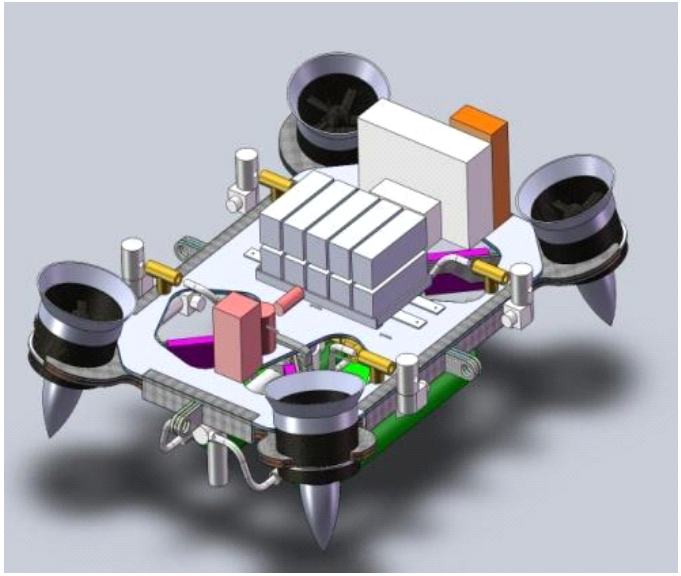

Design Overview

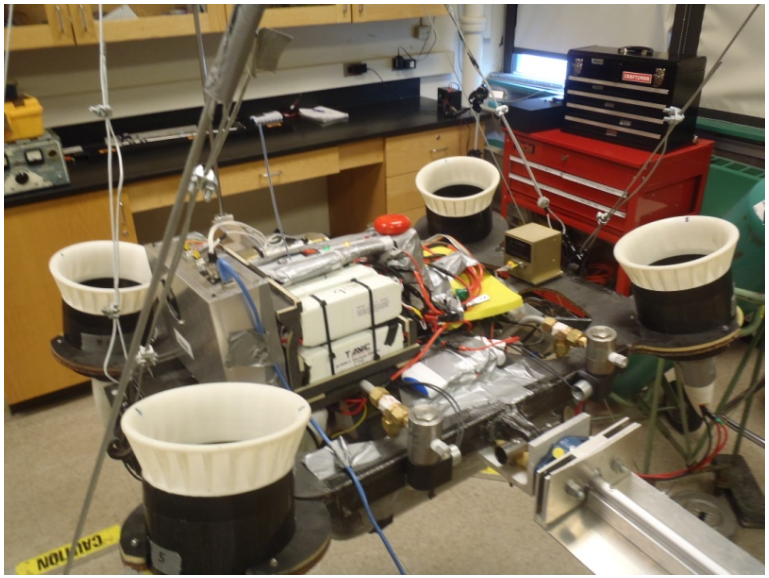

- Prototype hopper
  - Create simulated lunar environment
  - Demonstrate stable horizontal hop using impulsive thrusters
- Dual propulsion system
  - 4 x Electric Ducted Fans (EDFs) for gravity offset
  - 8 x Nitrogen Cold Gas thrusters
- National Instruments sbRIO-9642 computer
  - 400MHz PowerPC Processor
  - Xilinx Spartan-3 field programmable gate array (FPGA)
  - 110 3.3V DIO lines

Current Work

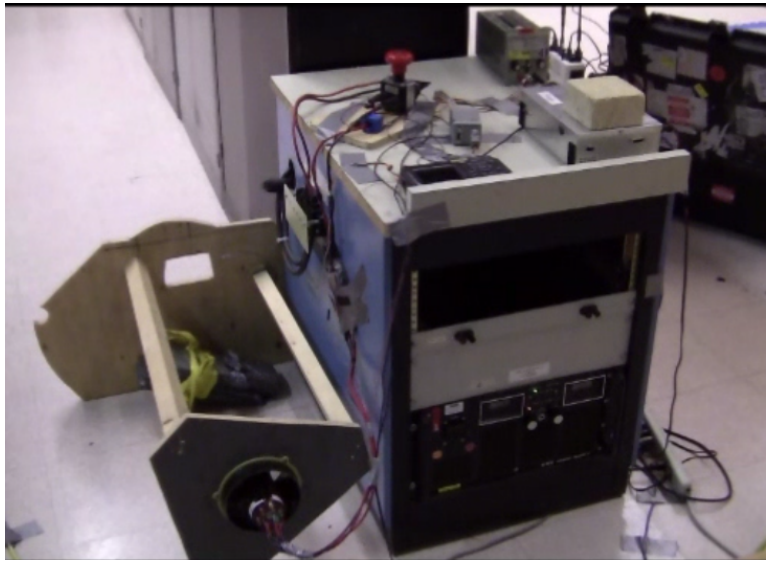

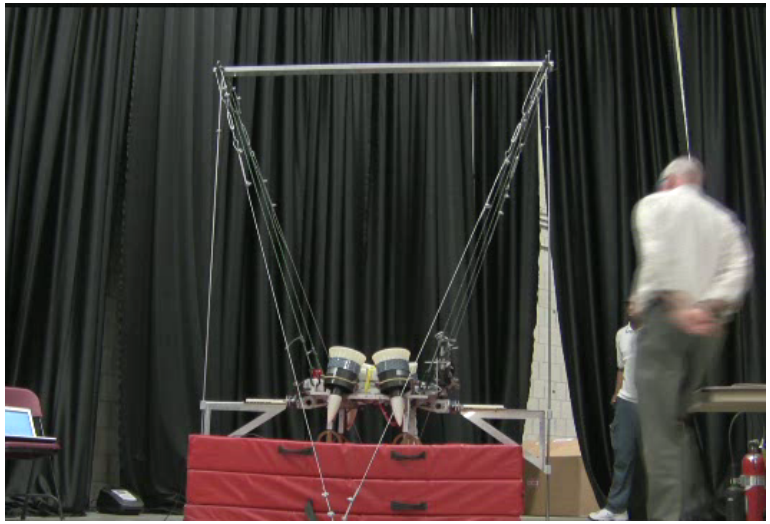

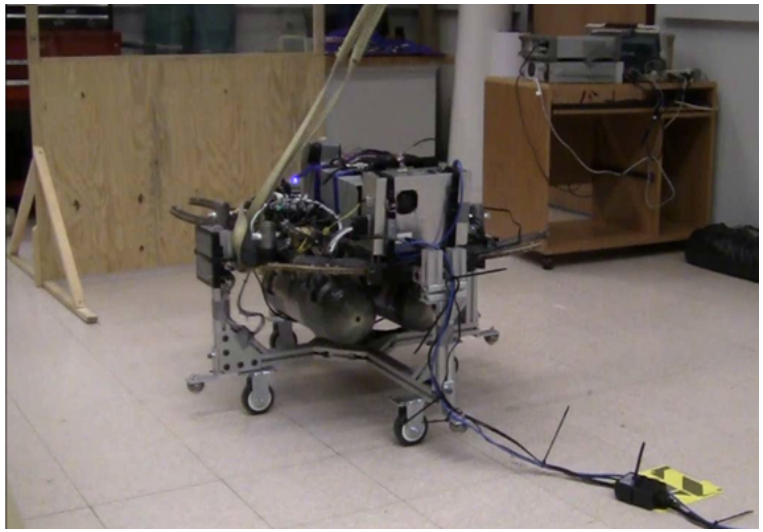

Prototype Software Development

- Prototype Software
  - Test in a safe environment before full flight
  - Useful in academic atmosphere: gain experience
  - Prevent delays in testing; develop flight software in parallel
- Requirements
  - Needs to be easy to learn - high student turnover rates
  - Short development cycle
  - Flexible – needs to be used for several different test campaigns
- LabView graphical programming language
  - Intuitive interface
  - Makes multi-threaded programming easy
  - Makes serial programming more difficult
  - Easy GUI development

LabVIEW Mapping to Modularity (1)

Functional Module Structure

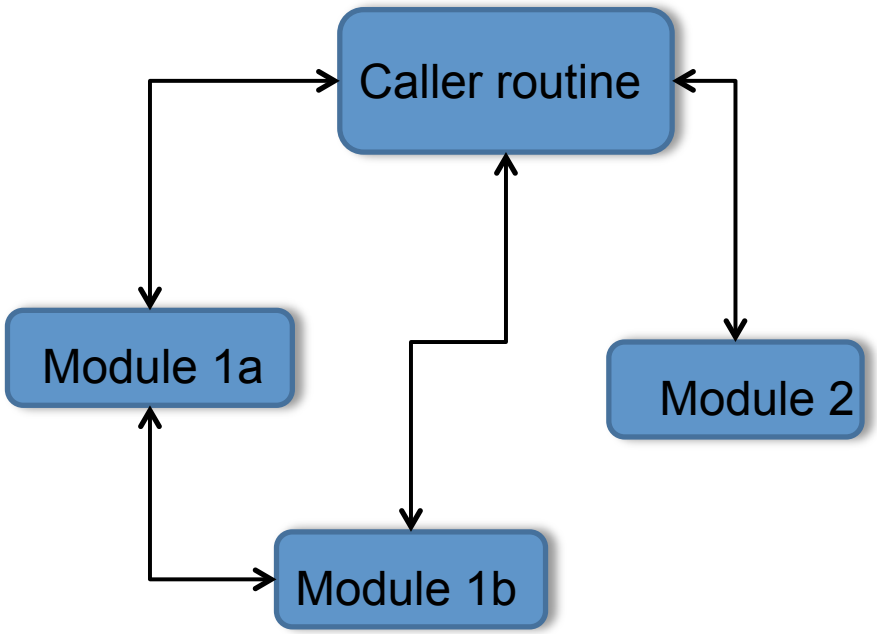

Physical Module Structure (C/ MATLAB/etc.)

```
%Caller routine
    if X
then
. . .

%Module 1a
   for k = 0,n
. . .
    sqrtk = sqrt(k)
    n = n + 1;

%Module 1b
. . .
```

LabVIEW Mapping to Modularity (2)

Functional Module Structure

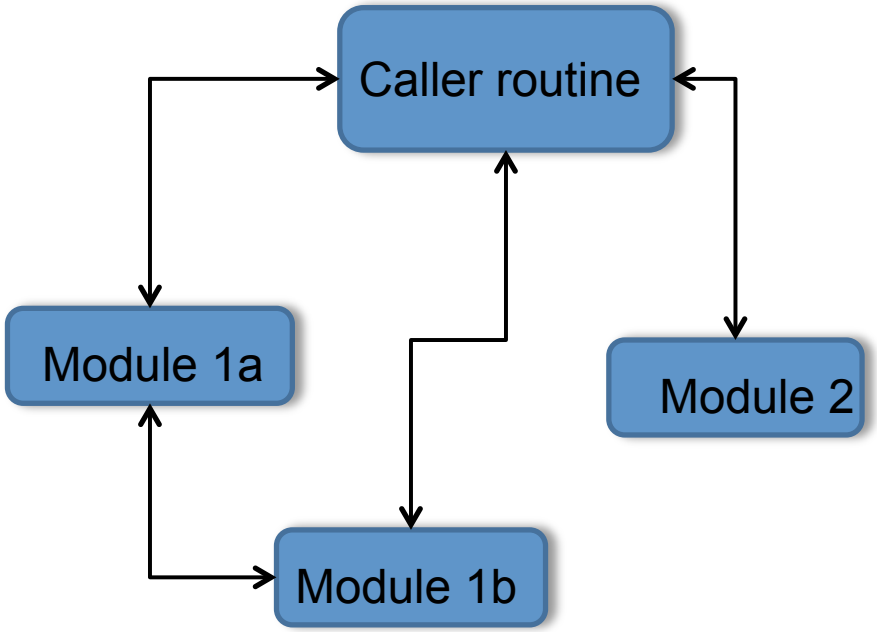

Physical Module Structure (LabVIEW)

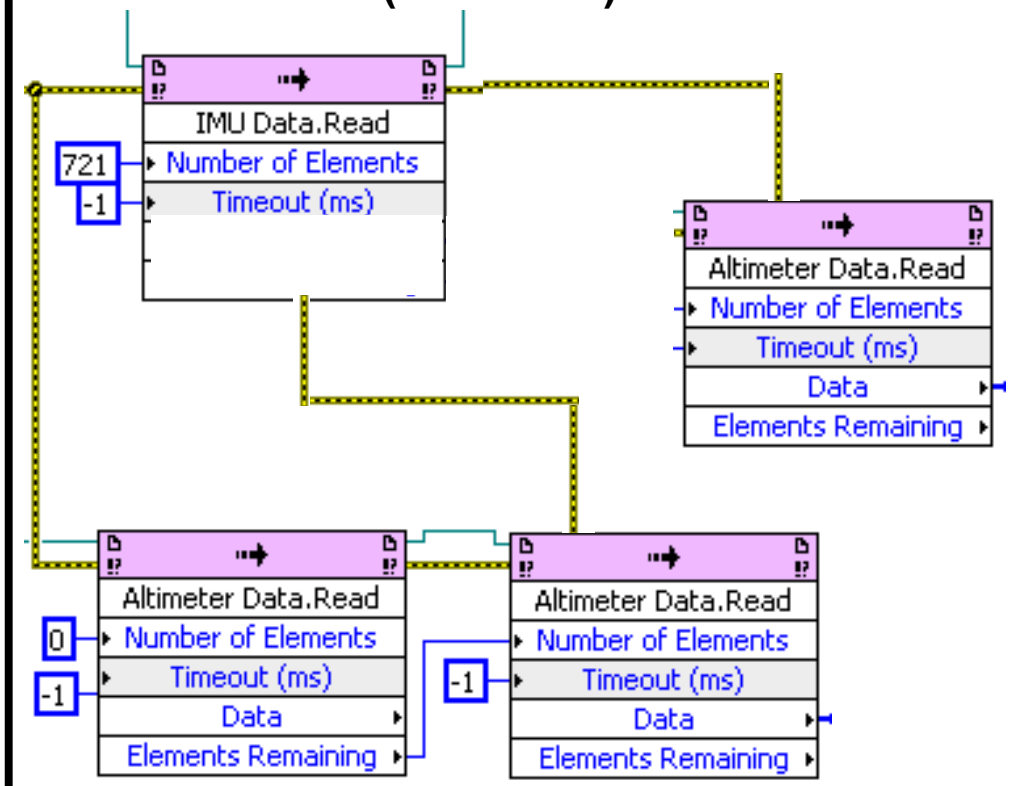

LabVIEW Mapping to Modularity (3)

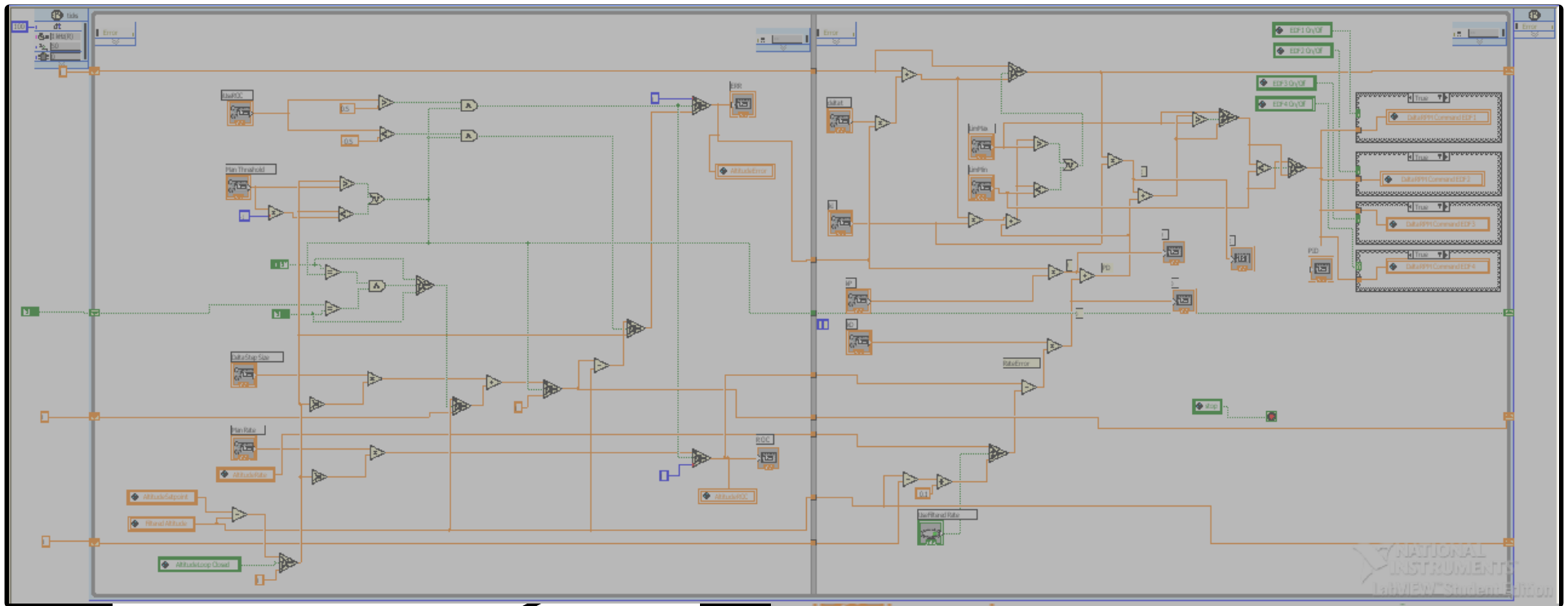

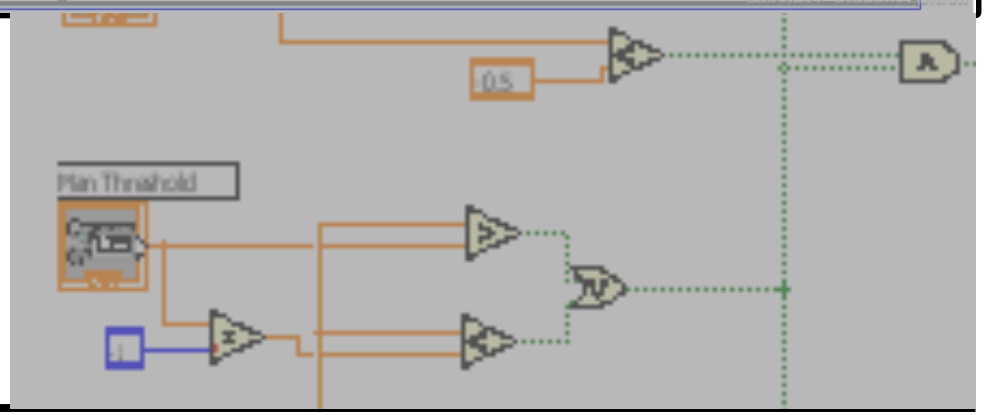

Modularity

- Labview is inherently suited to modular development
  - Separate program into functional blocks, or modules
- Defining Characteristics
  - Use of exchangeable components that can be easily switched out
  - Each module has little to no dependence on other parts of the system
  - Ability to incorporate a variety of configurations
- Formal Techniques
  - Separate and define functional attributes
    - i.e. sensing, data collection and logging, actuation, timing
  - Define standard interfaces
  - Determine series/parallel execution of modules
  - Map coupling and interaction between components

Modularity on TALARIS

- Hierarchical structure
  - FPGA -> PPC -> Flight Laptop
  - Implementation, Execution, and Timing of GNC algorithms
- Benefits
  - Increased organization
  - Easier to test and debug
  - Easier to work on with large teams
  - Ability to switch out GNC algorithms
  - Improve flexibility, maintainability, and reusability
- Detriments
  - Performance hit?
  - Initial development time?

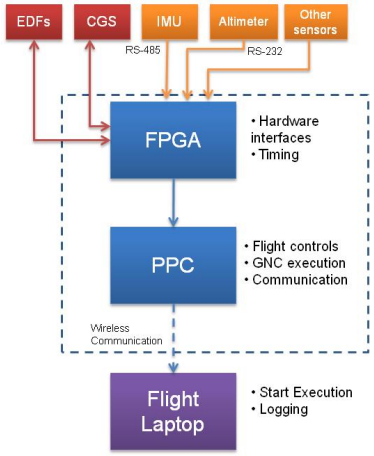

Modularity on TALARIS

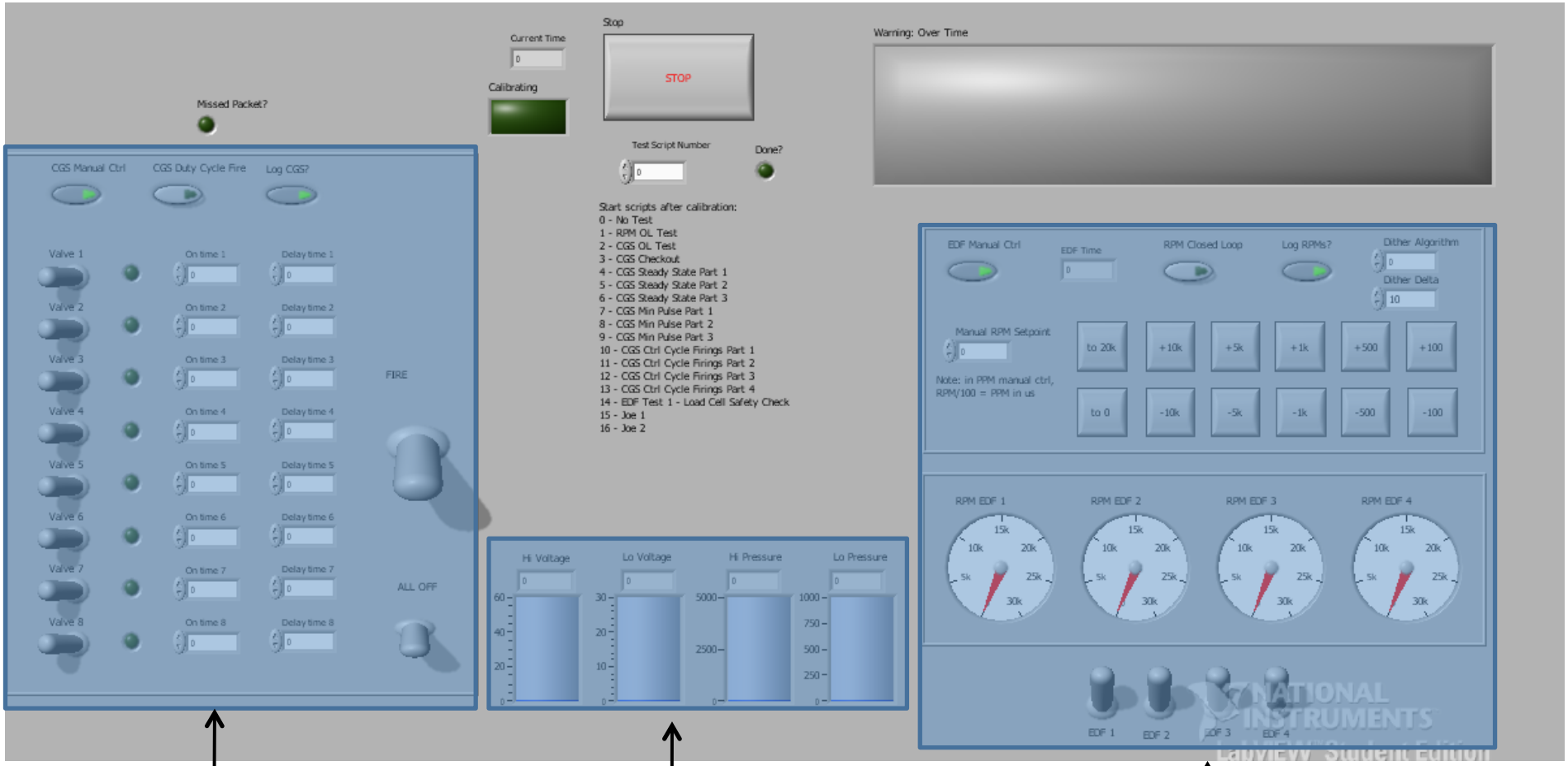

CGS controls and displays

Voltage and pressure sensors

EDF controls and displays

Modularity on TALARIS

Software & Avionics Architecture

- NI sbRIO-9642 computer
- FPGA
  - All hardware interfaces through DIO pins
  - Timing on single 40MHz clock
  - Package data with DMA FIFO
- PowerPC
  - Modular GNC implementation
  - Autocoding GNC from Matlab and/or C
  - Flight Controls
- Flight Laptop
  - Starts execution
  - Logging

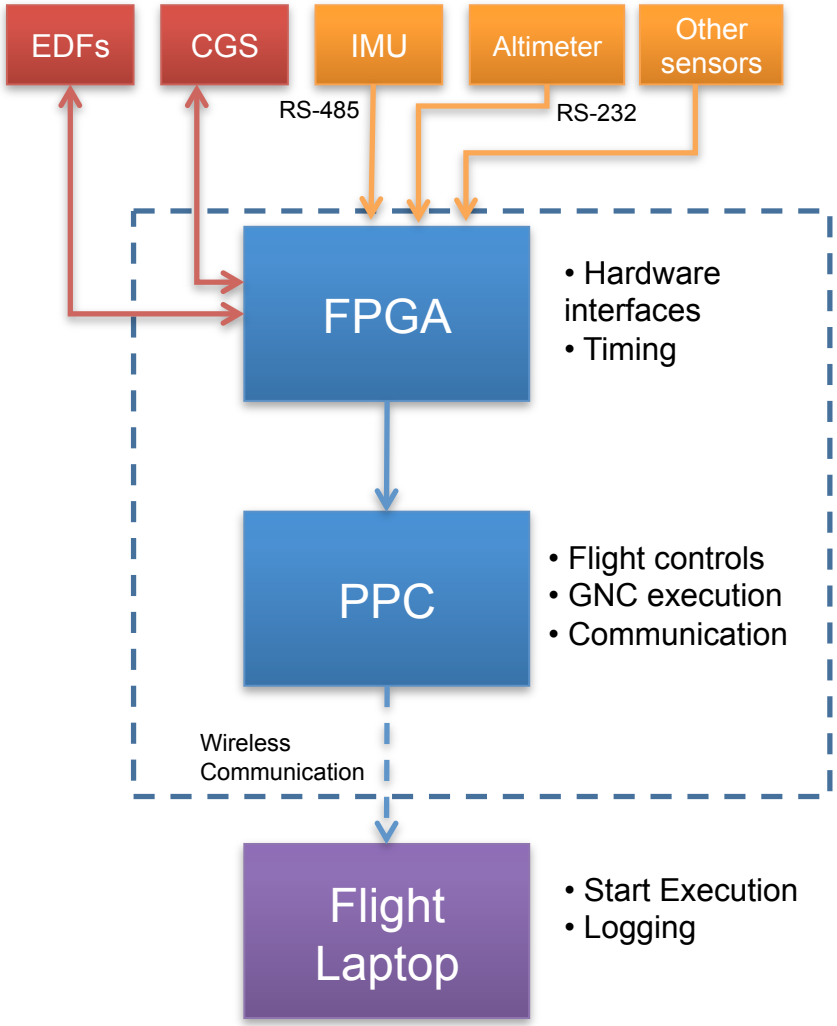

GNC Execution Example

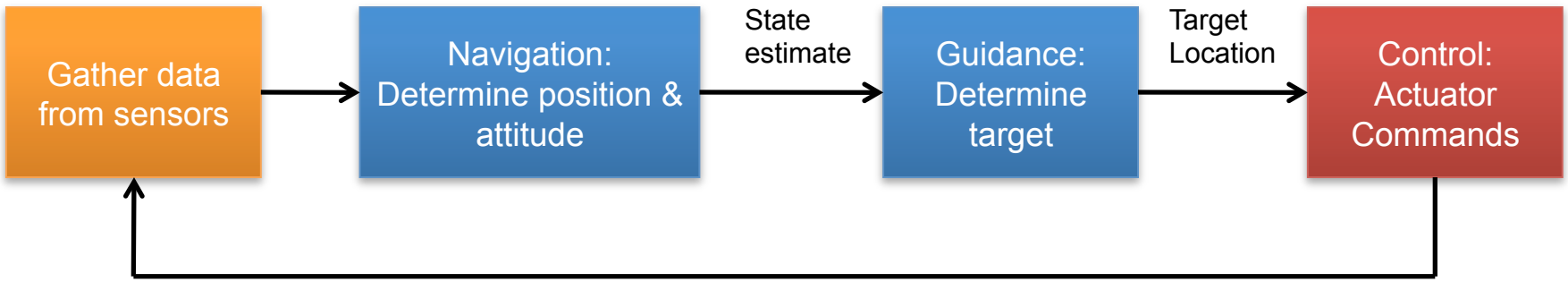

- 5 Hz (200ms) control frequency

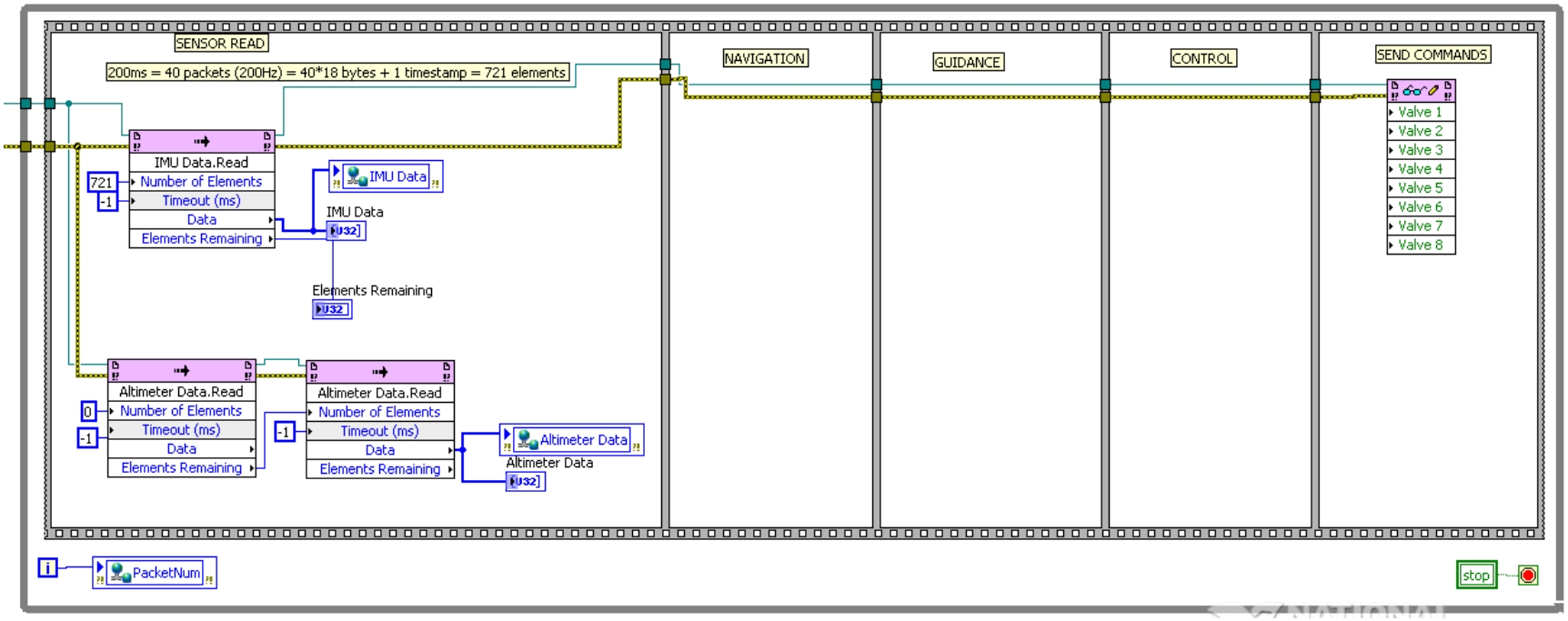

GNC Timeline

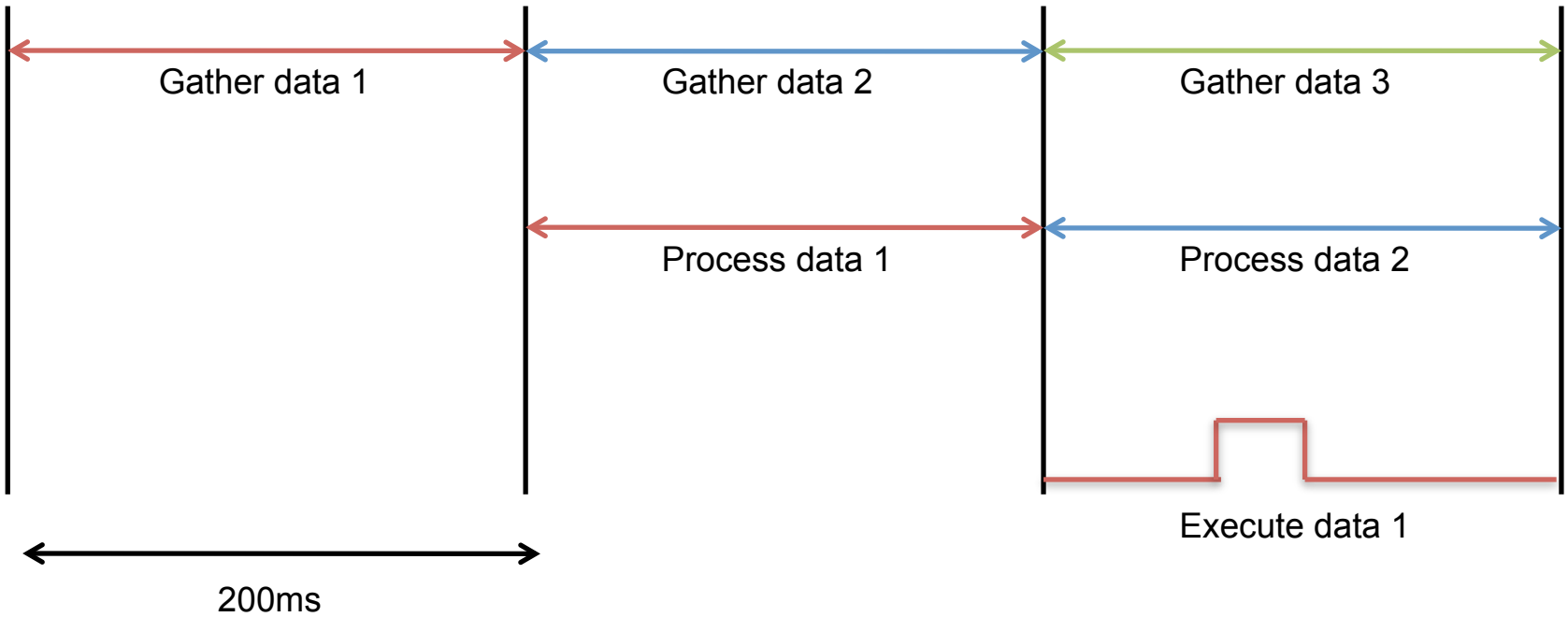

- 5Hz control frequency = 200ms “frames”
- Gather 200ms of IMU data, send up in packets
- Process data in chunks, send out commands to be executed on next boundary
- Control cycle delay?

GNC Timeline 2

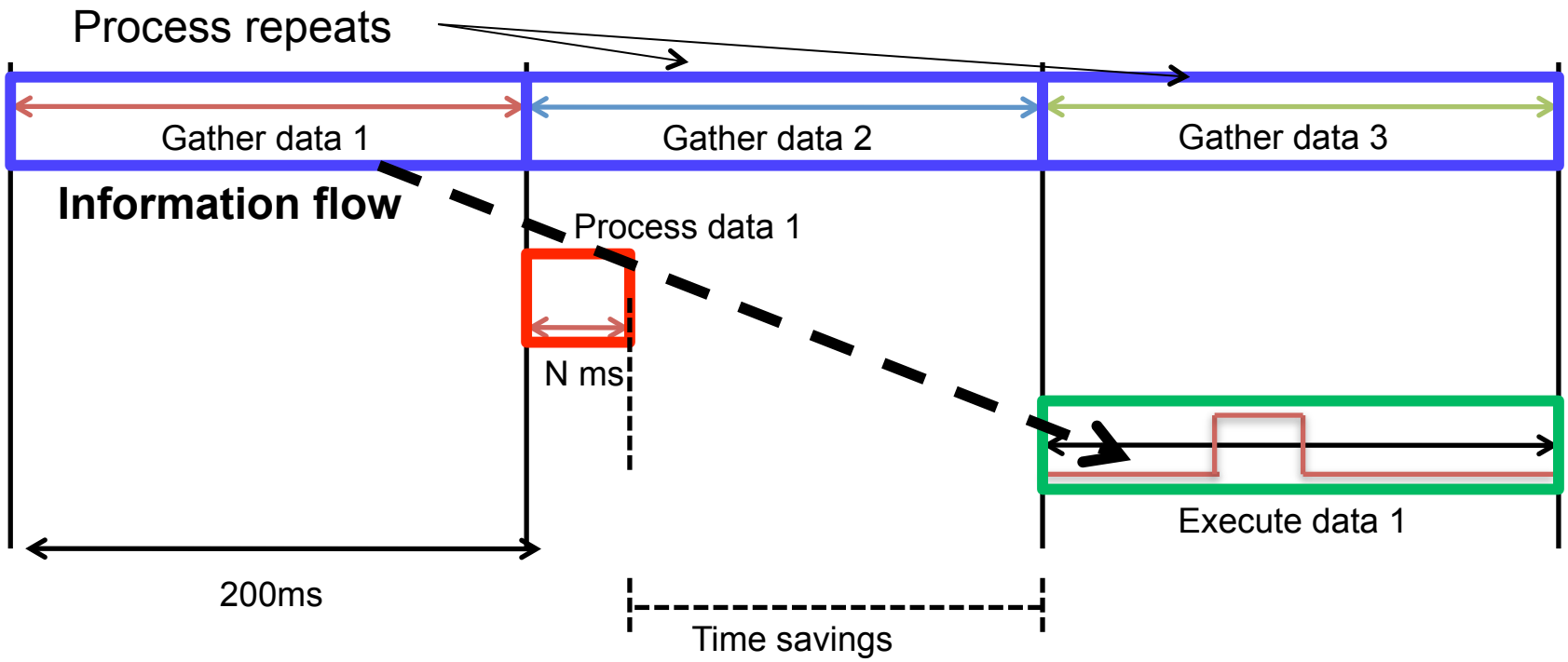

- Splitting of processes between modules enables fine-tuning of timing
  - One piece of information propagates between three modules
  - Each module has a different run time

Summary

- For prototype hardware with an aggressive testing schedule, need prototype software that can keep up
  - No delays in testing
  - Gain experience for flight software
- Labview has enabled TALARIS to test with multiple configurations
  - Manage a flexible, reusable software architecture
  - Maximize the testing opportunities while minimizing development time
- Modularity can help in the development, operation, and maintenance phases

Questions?

TALARIS would like to thank its sponsors: