A General Purpose Telemetry Monitor (GPTM) for the Hubble Space Telescope (HST)

Repurposing an Existing Design

C. P. Hoffman, F. H. Schiffer 3rd
GSFC Code 441 HST NSSC-1 Flight Software Team

Introduction

- Hubble Space Telescope (HST) operating for 21 years with 24x7 ground support
- A proven design was modified to provide an autonomous telemetry monitor
- There are clear benefits to design reuse
- There are also challenges and pitfalls to avoid

First, some background

Background

- HST is a mix of old and new technology
  - New Science Instruments are state of the art
  - The NASA Standard Spacecraft Computer (NSSC-1) designed in mid-1970s, first flown in 1980
    - NSSC-1 is part of the Science Instrument Command & Data Handling (SI C&DH) subsystem
    - On-orbit SI C&DH replaced with "new" 20 year old SI C&DH during Servicing Mission 4 (May 2009)
    - Programmed in NSSC-1 Assembly Language (18-bit octal)
      - Many executive programs inherited with little change from earlier NSSC-1 based spacecraft, most notably Solar Maximum Mission (SMM)

SI C&DH Hardware

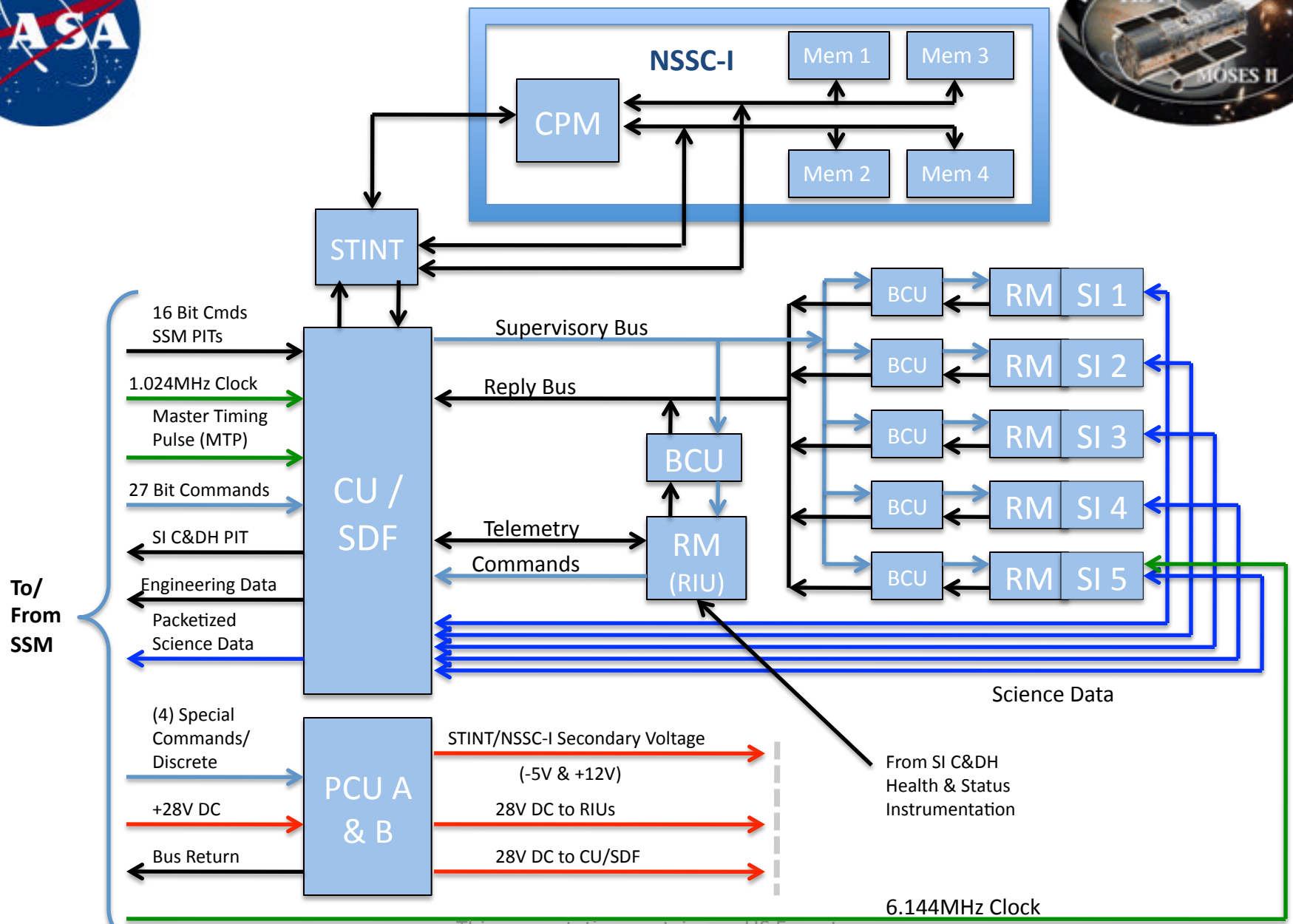

Automation Problem

- Transition from fully manned to autonomous lights out operations
  - HST was continuously monitored from the ground for 21 years
  - Flight operations staffing reduced to 8x5 support on June 13, 2011
    - Planning began before the last servicing mission
    - Need for an onboard autonomous anomaly response was recognized
      - » Minimize time between anomaly and response
      - » Avoid Flight Operations Team involvement in routine "anomalies"
      - » Reduce dependence on downlinked telemetry for anomaly response

Requirement

- HST Automation systems shall provide the ability to respond to specific spacecraft anomalies

Existing Monitoring Application Processors (APs)

MFMONTLM – Executive Telemetry Monitor Processor

- Limit checks up to 22 telemetry items
  - Posts a status message when limits are exceeded 5 times in a row
  - Safes Payload on loss of 1 Megahertz Clock
- Actions are hardcoded
- Runs every 60 seconds

MFGPEF – General Purpose Event Flag Processor

- Monitors up to 16 NSSC-1 addresses
  - Sets or clears one of 90 event flags when an action is required
  - Event Flags may be used to control a sequence of stored commanding
- Actions are controlled by a programmable table
- Runs every 0.5 second

Approaches with No Onboard Change

- MFMONTLM – ground system takes autonomous actions based on status messages
  - Status messages potentially transient and not visible due to telemetry limitations
- MFGPEF – monitor event flags in command sequence
  - One continuously running sequence per command processor
  - Independent actions tightly coupled by single command sequence

Approach with Onboard Change

- MFGPEF – Add optional ability to activate a command sequence
  - Make setting an Event Flag optional
  - Increase number of programmable slots to 32
  - The existing functionality would make this update fairly simple

Requirements Creep

- Original plan to update General Purpose Events Flag processor with ability to activate stored Relative Time Command Sequences (RTCS)s deemed insufficient
  - Decision was made to add MFGPTM as a new AP in addition to MFGPEF and MFMONTLM
  - Allow multiple actions per slot

Structural Changes for GPTM

- Event Flag Table cloned and modified
  - From 16 slots of 10 words, to 32 slots of 10 words
  - Spare fields used by Telemetry Monitor Table
    - 6 new fields added to existing 12 fields
      - New actions (Safing, RTCS, ESB, ESR), 1st Minor Frame, Track Mode
    - Modified meaning of two existing fields
      - Event flag field can disable Event Flag actions (0 now a legal value)
      - Science Instrument number expanded for use by Safing and RTCS
- Logic of Event Flag Processor modularized for Telemetry Monitor Processor
  - Divided into 5 subroutines
- Basic Design added to, but not changed

Event Flags Table Fields

Field	Description
FREQ	Frequency to monitor Location (0 – 8191) 0.5 sec. incr.
FREQCNTR	Internal Frequency Counter from 0 to FREQ
CONSCNTR	Consecutive Counter from 0 to MINCOUNT, -1 to initialize slot
LOCATION	Address to monitor (0 – 65535)
MASK	Bit Mask ANDed with LOCATION for bits to monitor
HILIM	Higher Limit for Limit Check
LOLIM	Lower Limit for Limit Check
EVNTFLAG	Event Flag number (1 – 15, 0 is illegal value)
SI	Science Instrument number (1 - 5, or 0 for Global Flag)
CHKTYPE	Limit Check Type (0 = In Limits, 1 = Out of Limits)
ACTTYPE	Action Type (0 = Latching, 1 =Tracking)
MINCOUNT	Minimum Consecutive times limit criteria must be met before taking action (1 - 4095)

New Fields for GPTM Table

Field	Description
SAFING	Action to Safe (0, 1). Also disables GPTM slot
RTCS	Action to activate specified RTCS (1-144, 0 = no RTCS)
ESB	Action to post Executive Status Buffer Message (0, 1)
ESR	Action to set GPTM Executive Status Report flag (0, 1)
TRKMODE	0= Continuous when action set, 1= on Transitions only
FSTMNFRM	First Minor Frame to sample location
Existing fields modified:	
EVNTFLAG	Event Flag number (1 – 15, 0 = no Event Flag)
SI	Science Instrument number (1 - 5, or 0 for no SI, 6 or 7 for Global Flag, 6 for ASCS Safing or RTCS, 7 for System RTCS or Payload Safing)

GPTM Data Structure

bits	18	17	16	15	14	13	12	11	10	9	8	7	6	5	4	3	2	1
word 1	SPARE					FREQ												
2	FREQCNTR (internal counter)																	
3	SPARE						CONSCNTR (internal counter)											
4	SPARE		LOCATION															
5	MASK																	
6	HILIM																	
7	LOLIM																	
8	S	RTCS								B	R	SI			EVNTFLAG			
9	SPARE								T	FSTMNFRM							A	C
10	SPARE						MINCOUNT											

S - SAFING B - ESB R - ESR

T – TRKMODE A - ACTTYPE C - CHKTYPE

Red = new fields for GPTM

Advantages of Design Reuse

- Quicker transition into development
  - Much of the desired functionality was already present
- Reuse of existing tests
- Reuse of Operational procedures and data structures
- Existing knowledge base of real world usage

Disadvantages of Design Reuse

- Limited requirements analysis of existing functions
- Old test scripts required extensive reworking before they would run in current test environment
- Schedule assumed only originally agreed-upon modifications would be added

Requirements Creep During Design Reviews

- Derived requirements were added to design
  - Need to stagger activation of RTCSs
    - Reduce processing load
    - Avoid nesting of one RTCS by a new RTCS
  - All slots must finish processing before next Master Timing Pulse (MTP, 500 millisecond cycle)

Requirements Creep During Design Reviews

- Other requirements were slipped in as minor modifications
  - Error checking when slot initialized, and also at action time
    - Common Error Response:
      - Set ESR, Post ESB, disable GPTM Slot
        - » If Safing Initiated, or if Error initiating Safing, activating RTCS, or Setting/ Resetting Event Flags
  - Prevent RTCS Nesting
    - Only activate RTCS if no other RTCS active for that SI
      - Slot will remain active if RTCS activation is delayed
  - Synchronize Monitoring to Telemetry
    - Optional first minor frame field added
      - Allow checking of subcommutated telemetry
      - Allows programming of slots for more efficient use of resources
  - Add two new tracking modes
    - Transition – only invokes RTCS or ESB on transition into action state
    - Continuous – continuously invokes RTCS or ESB while in action state

General Purpose Telemetry Monitor

Structure (initial, as modification of MFGPEF)

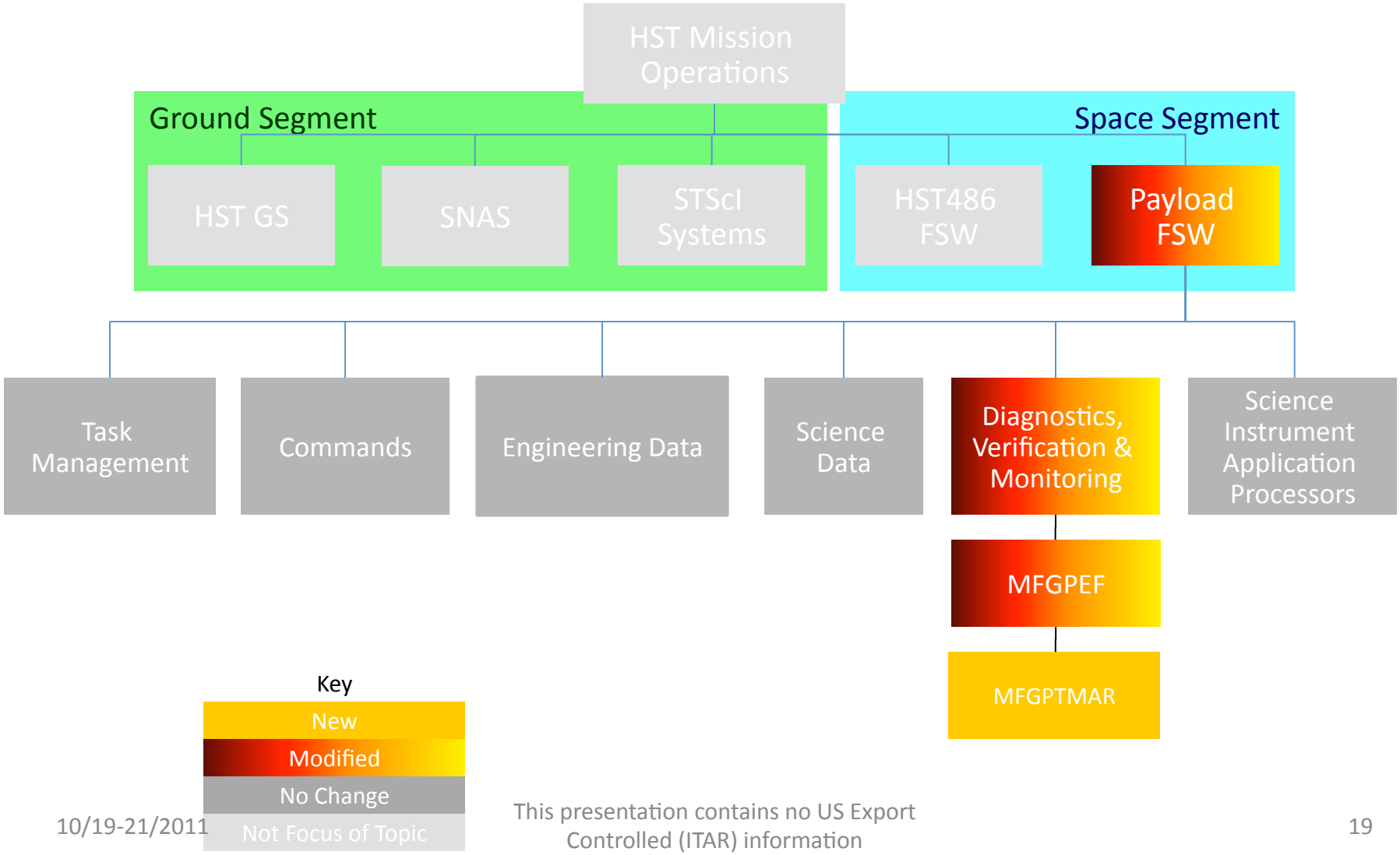

This presentation contains no US Export Controlled (ITAR) information

General Purpose Telemetry Monitor
Structure (PDR)

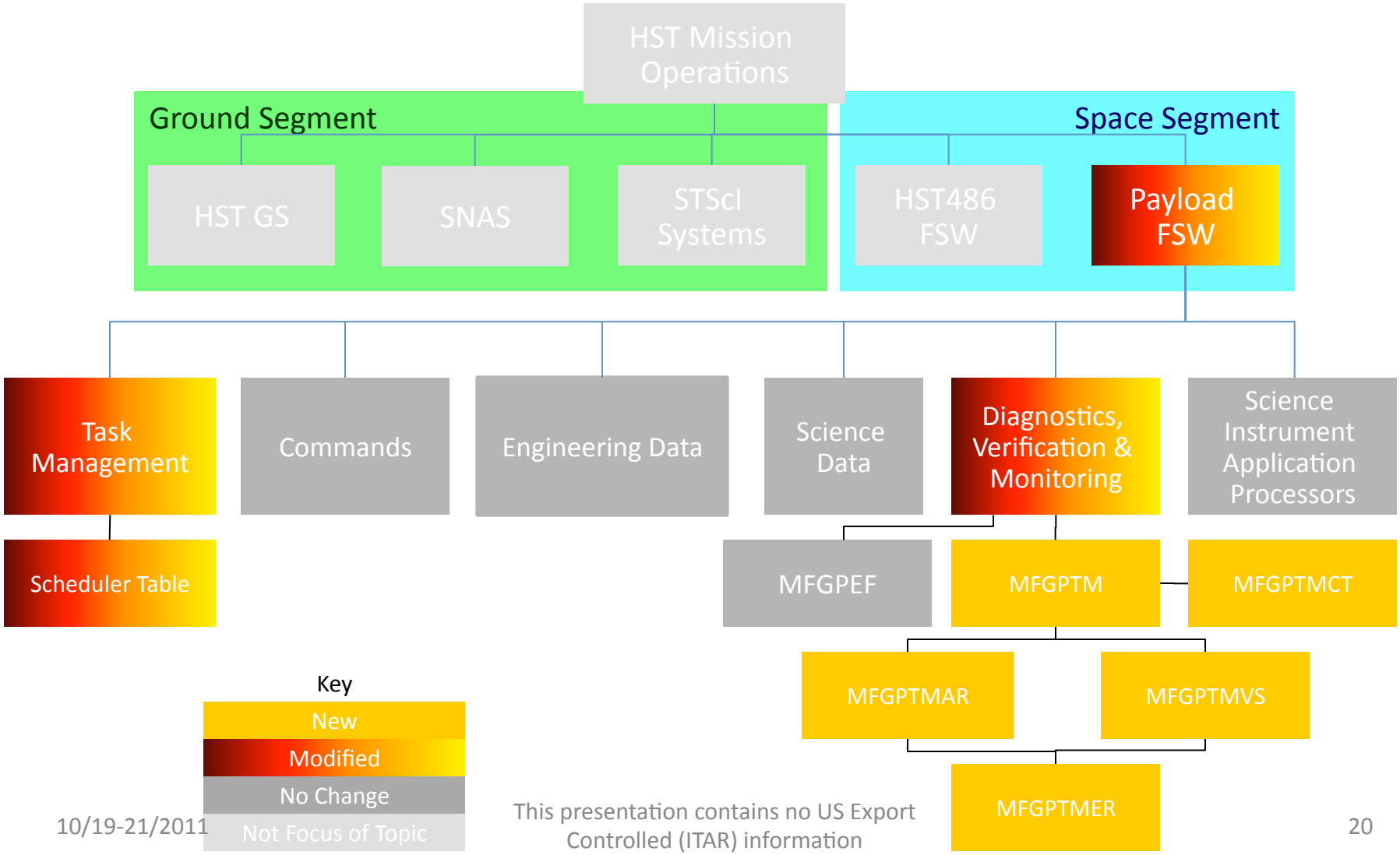

General Purpose Telemetry Monitor
Structure (final)

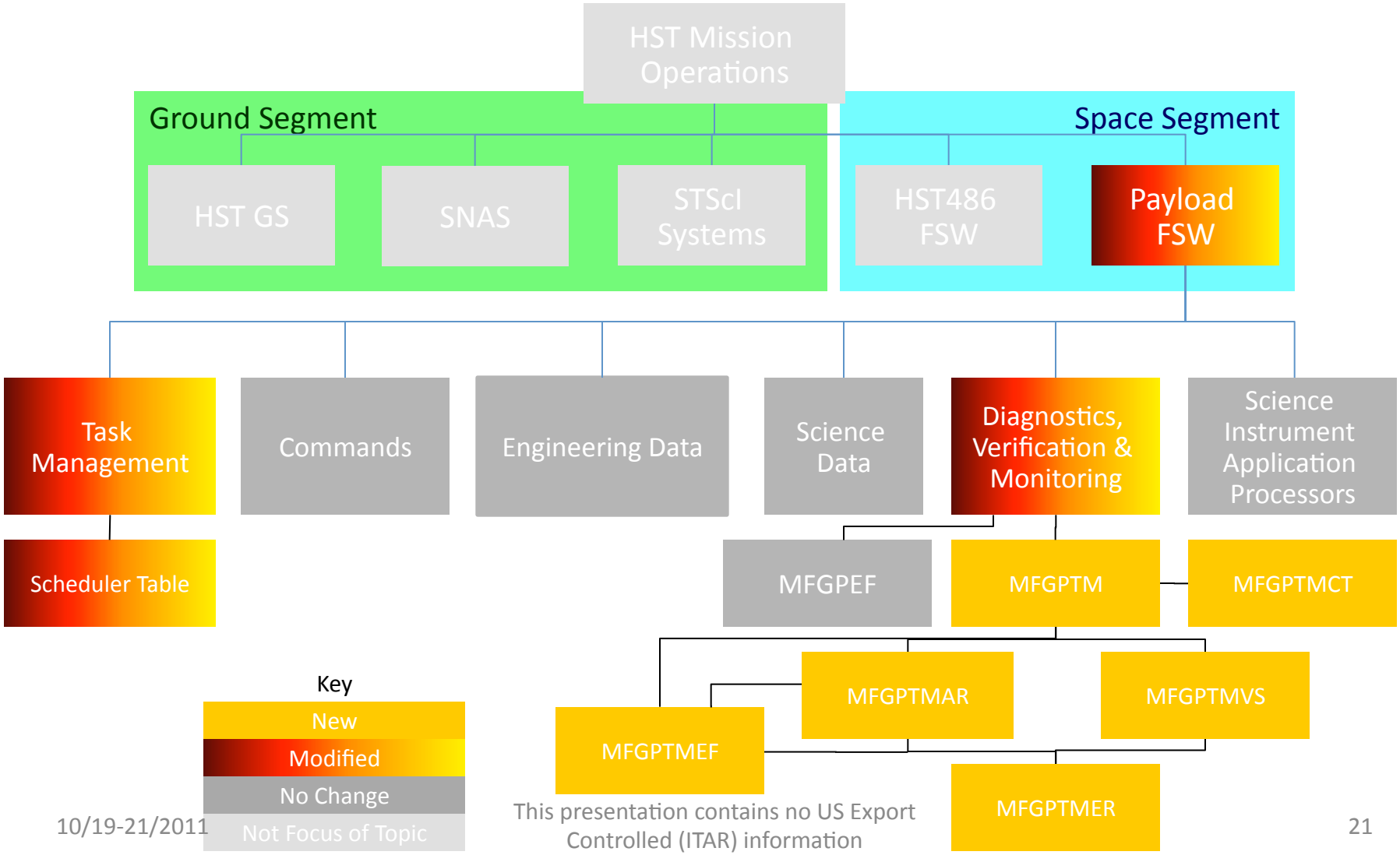

This presentation contains no US Export Controlled (ITAR) information

Problems due to Requirements Creep

- Modifications were made to the design without identifying the changes to the requirements
- There was no step back to re-examine the overall design in light of the changed requirements
- Unit tests matched the original/flawed design
- Design Errors slipped through as a result

Design Errors

- Continuous tracking generated actions whether or not actions were triggered for the monitored location
  - Needed to move Event Flag code to a separate subroutine
    - Called from Main routine or Action Response subroutine
- Tracking could cause the consecutive counter to wrap
  - Caused actions to be unexpectedly triggered
  - Needed to set consecutive counter to 2 after tracking limits satisfied
- If in Tracking Mode an RTCS was not activated due to another RTCS active, the RTCS would never be activated
  - Needed to reset consecutive counter to zero after tracking limits were satisfied

Design Error Impacts

- This was a double impact to the schedule
  - Created much more work than originally estimated
  - Flight software had to be modified and retested late in the development process
  - Symbol Of Interest (mapping of FSW variables to physical memory addresses) had already been delivered for the Project Database
    - Is a change to the SOI after delivery a big problem?

Yes!

Creating a new Project Database is an exacting process that requires a long lead time. Time we did not have.

Minimizing the Impact

- Adding the MFGPTM code to the end of memory minimized the impact to the SOI
  - Order of linking assembled NSSC-1 code to create an executable image is controlled by a linker
  - GPTM was linked into end of NSSC-1 memory, with control table first
    - No symbols used operationally were affected
  - This is standard procedure, when possible, to mitigate just such a problem

NSSC-1 Flight Software Development Process

Team Standard

- Design
  - Write/update PDL
  - Peer review *
- Code and Unit Test
  - Write/update Code
  - Write/update Unit Test script
  - Run Unit Test
  - Peer review code and unit test *
- System Test
  - Write/update System Test
  - Dry run System Test
  - Peer review System Test *
  - Formal run of System Test
- Delivery of Symbol Of Interest
- Delivery of executable

As implemented

- Design
  - Write/update PDL
  - Peer review
    - minor updates requested
- Code and Unit Test
  - Write/update Code
  - Write/update Unit Test script
  - Run Unit Test
  - Peer review code and unit test
    - addition of new requirements change design
- System Test
  - Write/update System Test
  - Dry run System Test
  - Peer review System Test
    - Test deemed barely adequate, but no time to fix before SOI delivery
  - Formal run of System Test - passed
- Delivery of Symbol Of Interest
- More rigorous System Test – failed
- New Design and Code updates with peer reviews
- Rerun of new System Tests - passed
- Delivery of executable, and updated SOI

* Repeat above steps as needed

Lessons Learned

- Identify requirements changes implied by changes made during design reviews
- Review entire design in light of requirements changes

Uses of General Purpose Telemetry Monitor

- Can replace tasks that have been done by special purpose RTCSs
- Reduces need for Ground Operations monitoring of telemetry

- GPTM is currently executing with an empty Table until HST Operations personnel develop and validate the actual slot definitions to be used on-orbit
- GPTM Programming Examples:
  - Latching example: Autonomous Safing
  - Latching example: Accommodate Yellow and Red limit actions
    - Program 2 slots to look at same telemetry point
  - Tracking example: CMOS Single Bit Error Flag Reset

GPTM Programming

Example 1: Safe Payload if 1 MHz Clock Lost

1	2	3	4	5	6	7	8	9	10
FREQ	**FREQCNTR**	**CONSCNTR**	**LOCATION**	**MASK**	**HILIM**	**LOLIM**	**ACTION:** **a - SAFING** **b - RTCS** **c - ESB** **d - ESR** **e - SI** **f - EVNTFLAG**	**TYPEFMF:** **a - TRKMODE** **b - FSTMNFRM** **c - ACTTYPE** **d - CHKTYPE**	**MINCOUNT**
1 Every 0.5 sec	0777777 (-1) initialize slot	0 always load zero	NSSC-1 address of 1 No 1 MHz Clock flag telemetry word	000002 Monitor bit 2 No 1 MHz Clock flag	000000 High limit = 0	000000 Low limit = 0	0400160 a=1 - Safing b=0 - NoRTCS c=0 - NoPost d=0 - NoSet e=7 - PAYLOAD f=0 - NoEF	000001 a=0 Continuous b=0 1st mf c=0 Latching d=1 OutLimit	5 Take action on 5th consecutive out of limit condition

- Initialize Payload Safing when “No 1 MHz Clock” flag is set 5 consecutive times
- Due to Latching, FREQ will be set to 0, disabling the slot until it is reset

Note: Values listed are “for example only”.

GPTM Programming

Example 2: Turn Off SDF if Side B Temperature is Out of Limits

	1	2	3	4	5	6	7	8	9	10
Slot	**FREQ**	**FREQCNTR**	**CONSCNTR**	**LOCATION**	**MASK**	**HILIM**	**LOLIM**	**ACTION:** **a - SAFING** **b - RTCS** **c - ESB** **d - ESR** **e - SI** **f - EVNTFLAG**	**TYPEFMF:** **a - TRKMODE** **b - FSTMNFRM** **c - ACTTYPE** **d - CHKTYPE**	**MINCOUNT**
n+1	024 (20) Every 10 sec.	0777777 (-1) Initialize slot	0 Always load 0	NSSC-1 address of SDF Side B Temperature telemetry	000377 monitor 8 low order bits	000342 Red Upper Limit	000052 Red Lower Limit	0217760 a=0 - NoSafe b=143 – RTCS TOFFSDF c=1 - Post d=1 - Set e=7 - SYSTEM f=0 - NoEF	000025 a=0 - Continuous b=4 - 1st mf c=0 - Latching d=1 - OutLimit	3 Take action on 3rd consecutive out of limits
n+2	024 (20) Every 10 sec.	0777777 (-1) Initialize slot	0 Always load 0	NSSC-1 address of SDF Side B Temperature telemetry	000377 Monitor 8 low order bits	000322 Yellow Upper Limit	000060 Yellow Lower Limit	000560 a=0 - NoSafe b=0 - NoRTCS c=1 - Post d=0 - NoSet e=7 - SYSTEM f=0 – NoEF	000025 a=0 - Continuous b=4 - 1st mf c=0 - Latching d=1 - OutLimit	3 Take action on 3rd consecutive out of limits

- Programming two slots to monitor the same telemetry allows red and yellow limit actions
  - Slot n+2 Post an ESB only
  - Slot n+1 activates RTCS 143 to Turn Off SDF, sets ESR flag and Posts an ESB
- Due to Latching, FREQ will be set to 0, disabling the triggered slot until it is reset

Note: Values listed are “for example only”.

GPTM Programming

Example 3: Reset CMOS Single Bit Error Flag when Set

1	2	3	4	5	6	7	8	9	10
FREQ	**FREQCNTR**	**CONSCNTR**	**LOCATION**	**MASK**	**HILIM (EU)**	**LOLIM (EU)**	**ACTION:** **a - SAFING** **b - RTCS** **c - ESB** **d - ESR** **e - SI** **f - EVNTFLAG**	**TYPEFMF:** **a - TRKMODE** **b - FSTMNFRM** **c - ACTTYPE** **d - CHKTYPE**	**MINCOUNT**
024 (20) Every 10 sec.	0777777 (-1) Initialize slot	0 Always load 0	NSSC-1 address of CMOS Single Bit Error Flag telemetry word	000040 Monitor CMOS Single Bit Error Flag	000000 Upper Limit	000000 Lower Limit	0220160 a=0 - NoSafing b=144 - RTCS CCMOSSBE c=0 - NoPost d=0 - NoSet e=7- SYSTEM f=0 - NoEF	001037 a=1 - Transition b=7 - 1st mf c=1 - Tracking d=1 - OutLimit	0 Not used for tracking

- When there is a Single Bit Error in NSSC-1 CMOS memory, the built-in EDAC function corrects the error and sets a flag in telemetry
- This GPTM slot will activate RTCS 144 to clear the SBE flag when it is set
  - Action Type = Tracking – the SBE telemetry is always monitored
  - Track Mode = Transition – the action takes place just when the SBE flag is set

Note: Values listed are "for example only".

Conclusion

- Design reuse has distinct advantages
  - Design is already tested and understood
  - A user knowledge base already exists
  - Test scripts already exist
- A reused design should be treated as new in terms of requirements analysis, and testing
  - Minor changes can have unexpected design implications
- Design for future maintainability

That's a wrap.

Detail of one of the simulator boards in our NSSC-1 FSW Lab.

BACKUP SLIDES

Acronyms

ACS – Advanced Camera for Surveys (SI 1)
AP – Application Processor
BCU – Bus Coupler Unit
C&DH – Command & Data Handling
COS – Cosmic Origins Spectrograph (SI 4)
CPM – Central Processor Module
CU – Control Unit
ESB – Executive Status Buffer message
ESR – Executive Status Report flag
FSW – Flight Software
GPTM – General Purpose Telemetry Monitor
HST – Hubble Space Telescope
MOSES – Mission Operations, System Engineering & Software
NASA – National Aeronautics and Space Administration
NICMOS – Near Infrared Camera and Multi-Object Spectrometer (SI 2)
NSSC-1 – NASA Standard Spacecraft Computer, Model 1
PCU – Power Control Unit
PDL – Program Design Language
RIU – Remote Interface Unit
RM – Remote Module
RTCS – Relative Time Command Sequence
SAA – South Atlantic Anomaly
SI – Science Instrument
SDF – Science Data Formatter
SMM – Solar Maximum Mission
SSM – Support Systems Module
STINT – Standard Interface
STIS – Space Telescope Imaging Spectrograph (SI 3)
WFC3 – Wide Field Camera 3 (SI 5)

GPTM Code Modules

- MFGPTM, General Purpose Telemetry Monitor (New)
  - General Purpose Telemetry Monitor (GPTM) Application Processor
  - 569 Lines of code
- MFGPTMAR, GPTM Action Response (New)
  - Handles any action programmed into a GPTM control table slot
  - 294 Lines of code = 259 Lines in module + 35 Lines in calling macro
- MFGPTMCT, GPTM Control Table (New)
  - Contains the 32 slot programmable GPTM Control Table
    - GPTM Control Table will be delivered empty
  - 320 word table - 10 words per slot
- MFGPTMEF, GPTM Event Flag (New)
  - Controls the setting and clearing of event flags by the GPTM AP
  - 192 Lines of code = 157 Lines in module + 35 lines in calling macro
- MFGPTMVS, GPTM Validate Slot (New)
  - Examines GPTM Control Table slots
  - Disables a slot found to have coding errors
  - 320 Lines of code
- MFGPTMER, GPTM Error Response (New)
  - Posts an ESB message with a parameter containing an error return code in bits 10-7, and GPTM Control Table slot number in bits 6-1
  - 114 Lines of code = 75 Lines in module + 39 Lines in calling macro
- MFUNIQUE, Mission Unique Data (Modified)
  - Add Executive Processor 9, General Purpose Telemetry Monitor, to the Scheduler Table
  - 1405 Lines of existing code, 11 lines modified